Centre Number	Candidate Number	Name

UNIVERSITY OF CAMBRIDGE INTERNATIONAL EXAMINATIONS
General Certificate of Education Ordinary Level

PHYSICS **5054/02**

Paper 2 Theory

May/June 2006

1 hour 45 minutes

Candidates answer on the Question Paper.
Additional Materials: Answer Booklet/Paper.

READ THESE INSTRUCTIONS FIRST

Write your Centre number, candidate number and name on all the work you hand in.
Write in dark blue or black pen.
You may use a soft pencil for any diagrams, graphs or rough working.
Do not use staples, paper clips, highlighters, glue or correction fluid.

Section A
Answer **all** questions.
Write your answers in the spaces provided on the Question Paper.

Section B
Answer any **two** questions.
Write your answers on the separate answer paper provided.

At the end of the examination, fasten the separate answer paper securely to the Question Paper.
The number of marks is given in brackets [ ] at the end of each question or part question.

For Examiner's Use	
Section A	
Q9	
Q10	
Q11	
Total	

This document consists of **12** printed pages.

MML 10759 3/05 T01296/2
© UCLES 2006

UNIVERSITY *of* CAMBRIDGE
International Examinations

[Turn over

For Examiner's Use

Section A

Answer **all** the questions in this section.

1 A student carries out an experiment to measure the power he produces. He runs up a flight of stairs, as shown in Fig. 1.1.

Fig. 1.1

The student takes readings to calculate his power.

(a) **(i)** List all of the readings he must take.

.....

.....

.....

..... [3]

(ii) State one precaution he should take to make sure one of his readings is accurate.

.....

..... [1]

(b) Write down all of the equations he must use to calculate his power from the readings.

You may use symbols or words in your equations.

.....

.....

.....

.....

..... [2]

© UCLES 2006

2 A cyclist starts from rest. He accelerates and then travels at a constant speed. At 12 s, the cyclist applies the brakes and slows down. Photographs are taken of the cyclist at 4 s intervals. Fig. 2.1 shows the results.

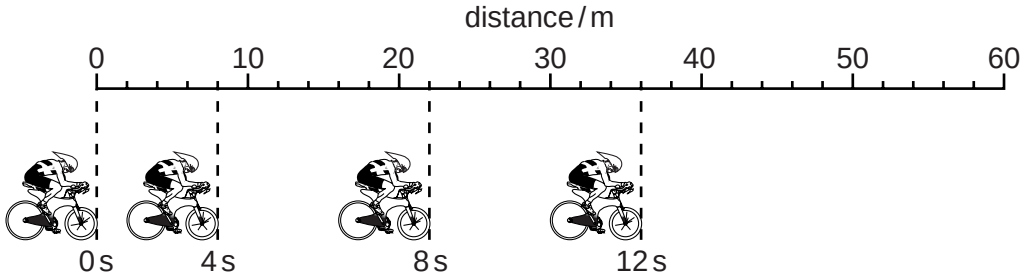

Fig. 2.1

(a) On Fig. 2.1, draw a possible position of the front wheel of the cycle at 16 s. [1]

(b) On Fig. 2.2, plot a distance-time graph of the cyclist for the first 16 s. [4]

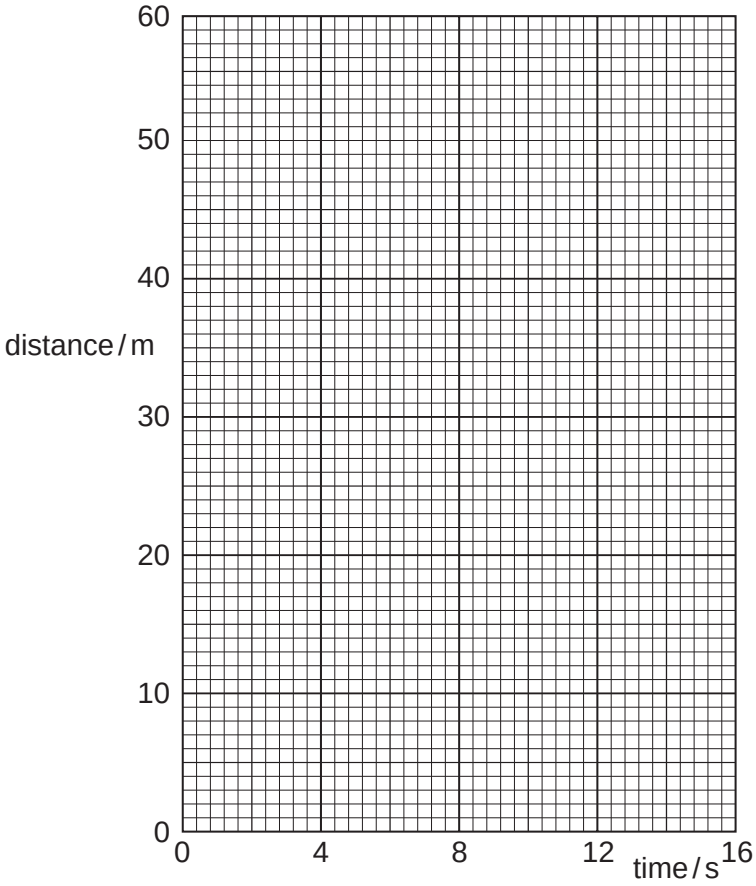

Fig. 2.2

(c) Calculate the average speed of the cyclist during the first 12 s.

average speed = ... [2]

For Examiner's Use

3 Fig. 3.1 shows the construction of a simple a.c. generator. When the coil is rotated an e.m.f. is induced in the coil.

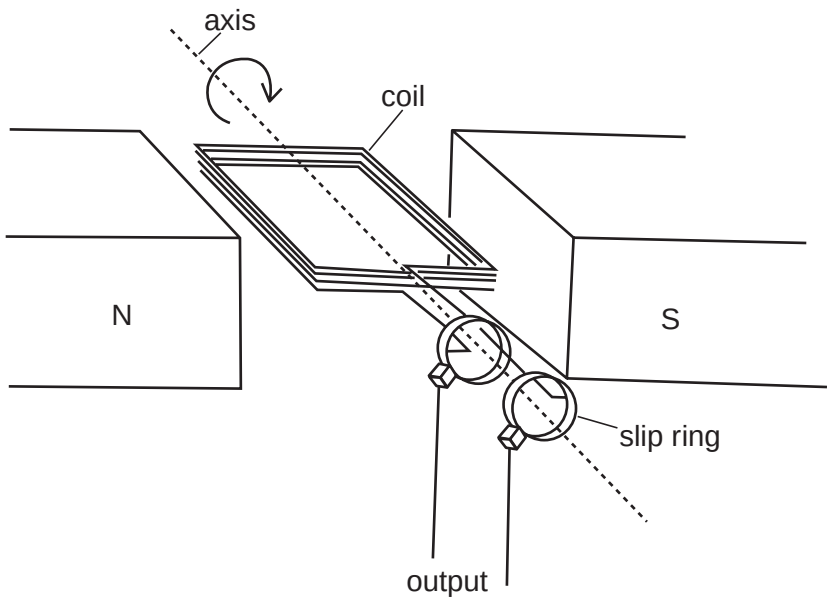

Fig. 3.1

(a) Explain why an e.m.f. is induced.

.....

.....

.....

..... [2]

(b) State the purpose of the slip rings.

.....

..... [1]

(c) The direction of the current in the coil can be found from Lenz's law.

State Lenz's law.

.....

.....

.....

..... [1]

(d) The induced e.m.f. can be increased by rotating the coil faster. State one other way in which the e.m.f. can be increased.

.....

..... [1]

© UCLES 2006

For Examiner's Use

4 Fig. 4.1 and Fig. 4.2 show rays of light passing through the same semi-circular block of plastic.

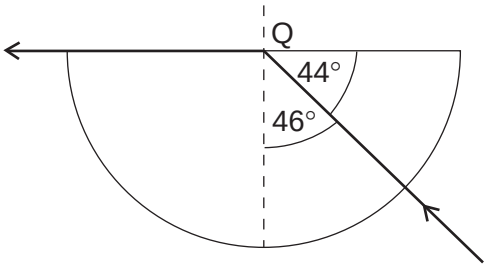

Fig. 4.1

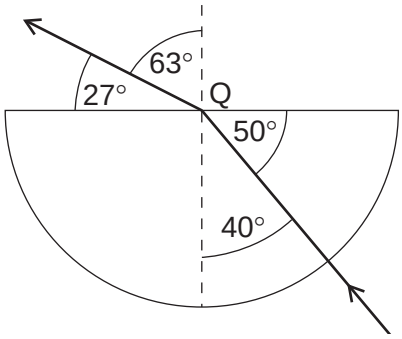

Fig. 4.2

Q is the centre of the straight side of the block.

(a) State the value of the critical angle in the plastic.

critical angle = ... [1]

(b) Explain what is meant by the *critical angle*.

.....

.....

.....

..... [2]

(c) Calculate the refractive index of the plastic. State the formula that you use.

refractive index = ... [3]

(d) Some light reflects back into the plastic at Q.

On Fig. 4.1, draw the reflected ray at Q. [1]

5 Two conducting spheres are rubbed and become charged, as shown in Fig. 5.1.

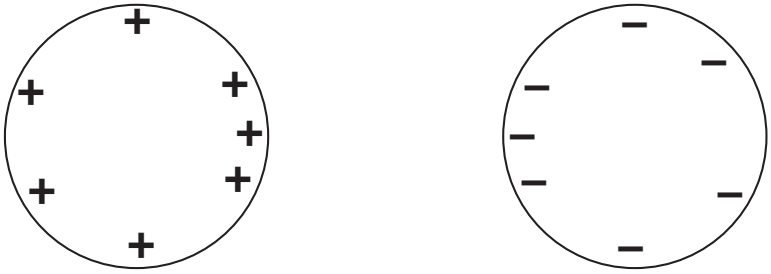

Fig. 5.1

(a) The spheres are uncharged before they are rubbed.

Explain, in terms of the movement of electrons, how they become charged.

.....

.....

.....

..... [1]

(b) On Fig. 5.1, draw the electric field pattern between the spheres. Show the direction of the field lines. [2]

(c) A metal wire is used to connect the two spheres together. In a time of 2.0×10^{-3} s, a charge of 1.8×10^{-13} C passes through the wire.

Calculate the current in the wire.

current = ... [2]

© UCLES 2006

For Examiner's Use

6 Fig. 6.1 shows a mains extension lead. The six sockets allow several electrical appliances to be connected to the mains supply through one cable.

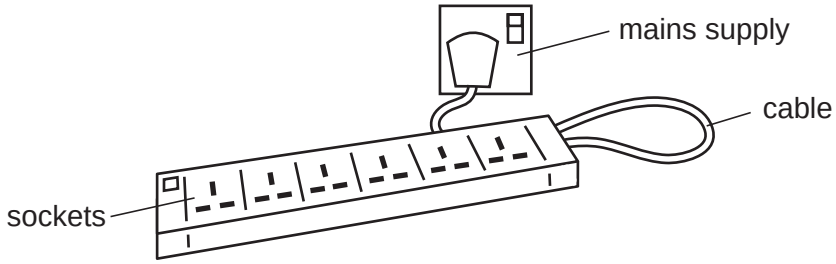

Fig. 6.1

(a) The cable connects the sockets to the mains supply.

The cable contains three wires: live, neutral and earth. State what is meant by

(i) *live*,

.....

..... [1]

(ii) *neutral*,

.....

..... [1]

(iii) *earth*.

.....

..... [1]

(b) Six powerful lamps are plugged into the sockets and switched on, one by one.

(i) State what happens in the cable as the lamps are switched on, one by one.

.....

..... [1]

(ii) Describe why it can be dangerous when a fuse of the wrong value is used in the plug.

.....

.....

..... [1]

(c) Explain why your hands should be dry when you put a plug into a socket.

.....

..... [1]

© UCLES 2006

7 Fig. 7.1 shows an electrical circuit and a cathode-ray oscilloscope (C.R.O.).

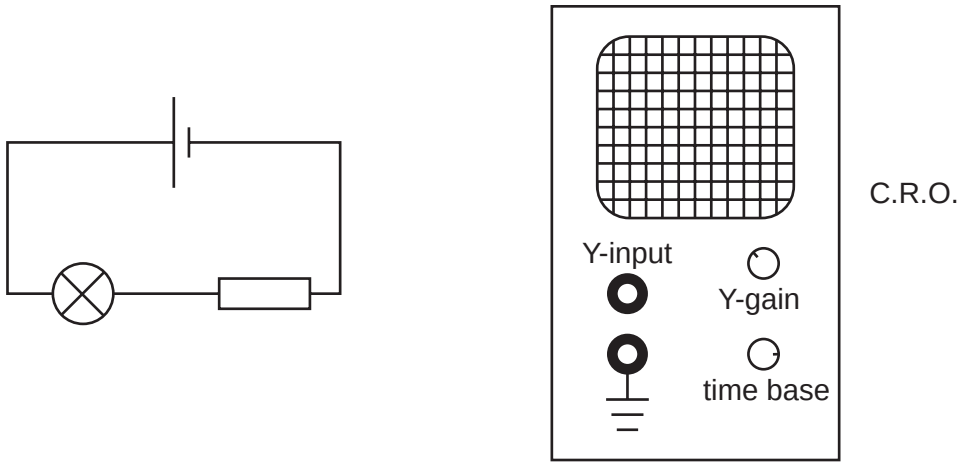

Fig. 7.1

(a) On Fig. 7.1, draw the connections you would make to enable the C.R.O. to measure the potential difference (p.d.) across the resistor. [1]

(b) Fig. 7.2 shows the trace on the screen before and after the connections are made.

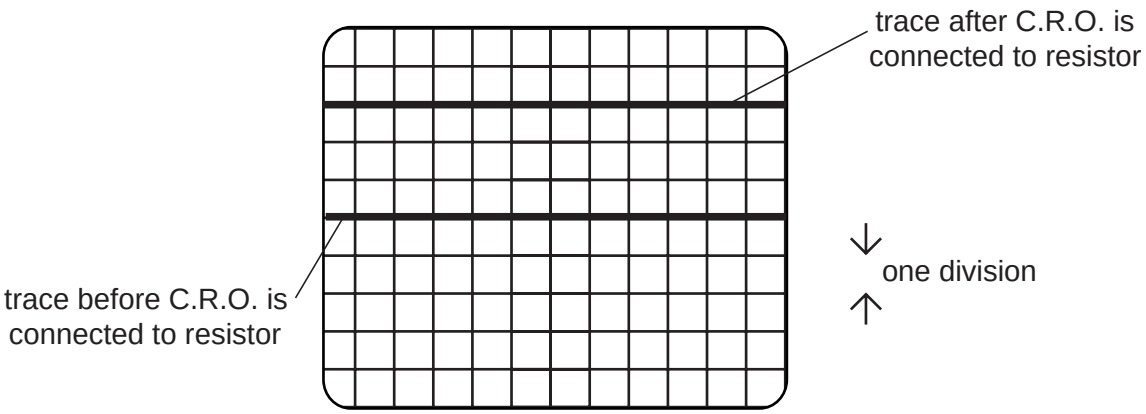

Fig. 7.2

The Y-gain control is set at 2 V for each division on the screen.

(i) State the value of the p.d. across the resistor.

p.d. = ... [2]

(ii) The Y-gain control is altered to 4 V for each division.

On Fig. 7.2, draw the new trace seen on the screen. [1]

© UCLES 2006

For Examiner's Use

8 A radioactive source undergoes radioactive decay.

(a) Explain what is meant by *radioactive decay*.

.....

.....

..... [2]

(b) Gamma-rays from a radioactive source are used to treat some foods.

The gamma-rays kill bacteria in the food so that it stays fresh.

Some people are worried that food treated in this way becomes radioactive. A scientist tests three food samples. She measures the count-rate of the food before and after treatment with gamma-rays. The results are shown in the table below. The radioactive source is not present during any test.

food sample	count-rate before treatment / counts per minute	count-rate after treatment / counts per minute
A	29	32
B	32	28
C	30	31

(i) Explain why there is a measured count-rate before the food is treated.

.....

.....

.....

..... [1]

(ii) Determine and explain whether the treated food becomes radioactive.

.....

.....

.....

.....

.....

..... [2]

Section B

Answer **two** questions from this section.

Use the separate answer sheets available from the Supervisor.

9 A student has an open tank for storing water outside her house. The tank is black and is in direct sunlight.

She notices that the level of water inside the tank slowly decreases as water evaporates.

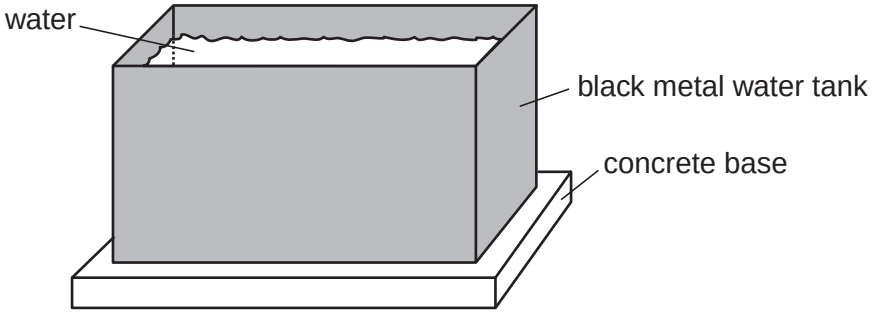

Fig. 9.1

She investigates whether some changes, shown in the table, will affect the amount of water evaporated each day.

change 1	a heater is used to increase the temperature of the water
change 2	a sheet of plastic is used to cover half the surface of the water
change 3	a fan is used to blow air over the top of the tank
change 4	the outside of the tank is painted white

Only one change is made at a time. All other factors are kept constant.

(a) State whether each change will increase, leave unchanged or decrease the amount of water evaporated each day. Explain each of your answers. [8]

(b) She notices that the water level in the tank falls by 0.005 m in 40 000 s.

The cross-sectional area of the tank is 3.0 m^2. The density of water is 1000 kg/m^3.

The specific latent heat of vaporisation of water is 2.2×10^6 J/kg.

Calculate

(i) the volume of water that evaporates, [1]

(ii) the mass of water that evaporates, [2]

(iii) the energy required to evaporate the water, [2]

(iv) the average rate at which energy is used to evaporate the water. [2]

© UCLES 2006

10 Fig.10.1 shows a section through a very old bicycle tyre that is made of solid rubber.

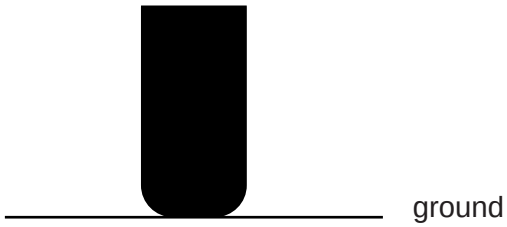

Fig. 10.1

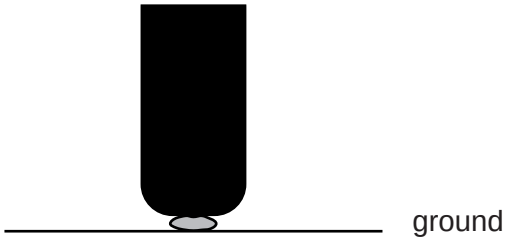

Fig. 10.2

(a) The solid rubber tyre exerts a pressure on the ground.

The unit of pressure is the pascal (Pa).

(i) Define the pascal. [2]

(ii) The mass of the bicycle and rider is 60 kg and the total area of the tyres in contact with the road is $2.4 \times 10^{-3}\,m^2$. The gravitational field strength is 10 N/kg.

Calculate the pressure exerted on the road. [3]

(iii) One of the solid rubber tyres goes over a small stone, as shown in Fig. 10.2. Describe and explain how the pressure exerted on the ground changes. [2]

(b) Fig. 10.3 shows a modern tyre that contains air. A heavy person sits on the bicycle and the shape of the tyre changes, as shown in Fig. 10.4.

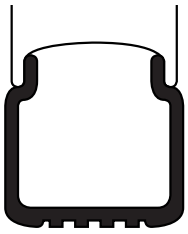

Fig. 10.3

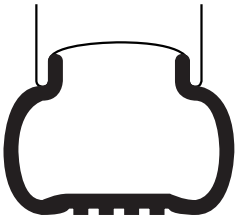

Fig. 10.4

The table contains information about the tyre in Fig. 10.3 and Fig. 10.4.

	tyre in Fig. 10.3	tyre in Fig. 10.4
air pressure in tyre / Pa	1.9×10^5	2.1×10^5
volume of air / m^3	0.016	V

(i) Calculate the volume V of the air in the tyre in Fig. 10.4. State one assumption that you make in your calculation. [4]

(ii) Another way to change the pressure in the tyre is to raise the temperature.

State what happens to the pressure in the tyre when the temperature rises and explain your answer using ideas about molecules. [4]

© UCLES 2006

11 Fig.11.1 shows a wiring diagram for two different lamps A and B.

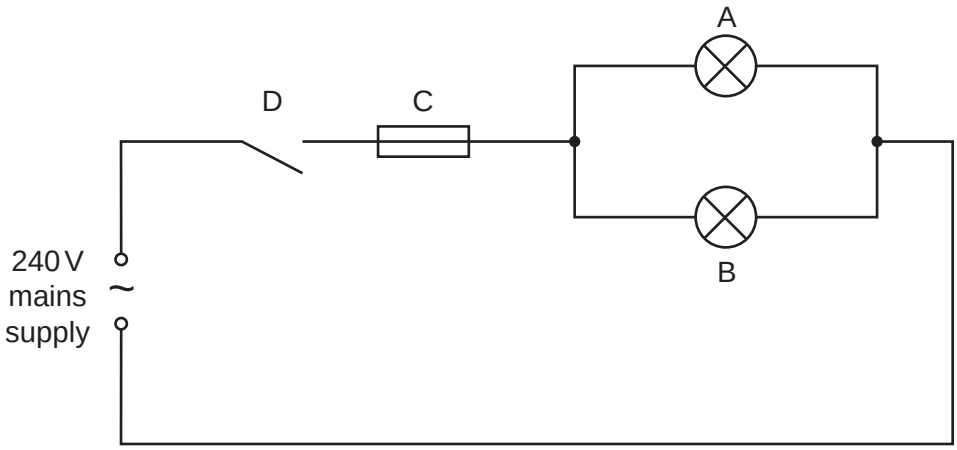

Fig. 11.1

(a) State the names of components C and D and explain the purpose, in this circuit, of each of these components. [4]

(b) When both lamps are working correctly, the current in C is 0.42 A.

Lamp A is marked 240 V, 60 W. Calculate

(i) the current in lamp A, [2]

(ii) the current in lamp B, [2]

(iii) the resistance of lamp A. [3]

(c) The two lamps in Fig. 11.1 are connected in parallel. When wiring the circuit in a house, an electrician makes a mistake and connects the two lamps in series to the mains supply. He switches them on.

(i) Draw a circuit diagram showing the two lamps connected in series to the mains supply. [1]

(ii) State whether the current in the two lamps is larger than, the same as, or smaller than the currents you have calculated in **(b)**. Explain your answer. [2]

(d) Another lamp is made using the same material for the filament as lamp A.

The filament in this new lamp has the same length as the filament in lamp A but has half the cross-sectional area.

State the resistance of the new lamp. [1]

Permission to reproduce items where third-party owned material protected by copyright is included has been sought and cleared where possible. Every reasonable effort has been made by the publisher (UCLES) to trace copyright holders, but if any items requiring clearance have unwittingly been included, the publisher will be pleased to make amends at the earliest possible opportunity.

University of Cambridge International Examinations is part of the University of Cambridge Local Examinations Syndicate (UCLES), which is itself a department of the University of Cambridge.

© UCLES 2006