UNIVERSITY OF CAMBRIDGE INTERNATIONAL EXAMINATIONS
General Certificate of Education
Advanced Subsidiary Level and Advanced Level

PHYSICS **9702/12**

Paper 1 Multiple Choice **May/June 2010**

1 hour

Additional Materials: Multiple Choice Answer Sheet
Soft clean eraser
Soft pencil (type B or HB is recommended)

READ THESE INSTRUCTIONS FIRST

Write in soft pencil.
Do not use staples, paper clips, highlighters, glue or correction fluid.
Write your name, Centre number and candidate number on the Answer Sheet in the spaces provided unless this has been done for you.

There are **forty** questions on this paper. Answer **all** questions. For each question there are four possible answers **A**, **B**, **C** and **D**.
Choose the **one** you consider correct and record your choice in **soft pencil** on the separate Answer Sheet.

Read the instructions on the Answer Sheet very carefully.

Each correct answer will score one mark. A mark will not be deducted for a wrong answer.
Any working should be done in this booklet.

This document consists of **24** printed pages.

© UCLES 2010

WWW.XTREMEPAPERS.NET

Data

speed of light in free space,	$c = 3.00 \times 10^{8}\,\mathrm{m\,s^{-1}}$
permeability of free space,	$\mu_0 = 4\pi \times 10^{-7}\,\mathrm{H\,m^{-1}}$
permittivity of free space,	$\varepsilon_0 = 8.85 \times 10^{-12}\,\mathrm{F\,m^{-1}}$
elementary charge,	$e = 1.60 \times 10^{-19}\,\mathrm{C}$
the Planck constant,	$h = 6.63 \times 10^{-34}\,\mathrm{J\,s}$
unified atomic mass constant,	$u = 1.66 \times 10^{-27}\,\mathrm{kg}$
rest mass of electron,	$m_e = 9.11 \times 10^{-31}\,\mathrm{kg}$
rest mass of proton,	$m_p = 1.67 \times 10^{-27}\,\mathrm{kg}$
molar gas constant,	$R = 8.31\,\mathrm{J\,K^{-1}\,mol^{-1}}$
the Avogadro constant,	$N_A = 6.02 \times 10^{23}\,\mathrm{mol^{-1}}$
the Boltzmann constant,	$k = 1.38 \times 10^{-23}\,\mathrm{J\,K^{-1}}$
gravitational constant,	$G = 6.67 \times 10^{-11}\,\mathrm{N\,m^{2}\,kg^{-2}}$
acceleration of free fall,	$g = 9.81\,\mathrm{m\,s^{-2}}$

© UCLES 2010

WWW.XTREMEPAPERS.NET

Formulae

uniformly accelerated motion,	$s = ut + \frac{1}{2}at^2$
	$v^2 = u^2 + 2as$
work done on/by a gas,	$W = p\Delta V$
gravitational potential,	$\phi = -\frac{Gm}{r}$
hydrostatic pressure,	$p = \rho gh$
pressure of an ideal gas,	$p = \frac{1}{3}\frac{Nm}{V}\langle c^2\rangle$
simple harmonic motion,	$a = -\omega^2 x$
velocity of particle in s.h.m.,	$v = v_0 \cos \omega t$
	$v = \pm\omega\sqrt{x_0^2 - x^2}$
electric potential,	$V = \frac{Q}{4\pi\varepsilon_0 r}$
capacitors in series,	$1/C = 1/C_1 + 1/C_2 + \ldots$
capacitors in parallel,	$C = C_1 + C_2 + \ldots$
energy of charged capacitor,	$W = \frac{1}{2}QV$
resistors in series,	$R = R_1 + R_2 + \ldots$
resistors in parallel,	$1/R = 1/R_1 + 1/R_2 + \ldots$
alternating current/voltage,	$x = x_0 \sin \omega t$
radioactive decay,	$x = x_0 \exp(-\lambda t)$
decay constant,	$\lambda = \frac{0.693}{t_{\frac{1}{2}}}$

WWW.XTREMEPAPERS.NET

1 A micrometer screw gauge is used to measure the diameter of a copper wire.

The reading with the wire in position is shown in diagram 1. The wire is removed and the jaws of the micrometer are closed. The new reading is shown in diagram 2.

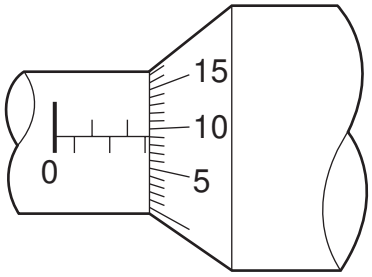

diagram 1

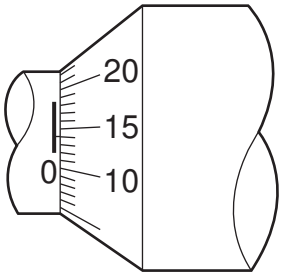

diagram 2

What is the diameter of the wire?

A 1.90 mm **B** 2.45 mm **C** 2.59 mm **D** 2.73 mm

2 The SI unit for potential difference (the volt) is given, in base units, by

A $kg\,m\,A^{-1}\,s^{-3}$.

B $m^2\,A^{-1}\,s^{-2}$.

C $kg\,m^2\,s^{-2}$.

D $kg\,m^2\,A^{-1}\,s^{-3}$.

Space for working

WWW.XTREMEPAPERS.NET

3 A student finds the density of a liquid by measuring its mass and its volume. The following is a summary of his measurements.

mass of empty beaker = (20 ± 1) g

mass of beaker + liquid = (70 ± 1) g

volume of liquid = (10.0 ± 0.6) cm^3

He correctly calculates the density of the liquid as 5.0 g cm^{-3}.

What is the uncertainty in this value?

A 0.3 g cm^{-3} **B** 0.5 g cm^{-3} **C** 0.6 g cm^{-3} **D** 2.6 g cm^{-3}

4 An ion is accelerated by a series of electrodes in a vacuum. A graph of the power supplied to the ion is plotted against time.

What is represented by the area under the graph between two times?

A the change in kinetic energy of the ion

B the average force on the ion

C the change in momentum of the ion

D the change in velocity of the ion

Space for working

WWW.XTREMEPAPERS.NET

5 The diagram shows a square-wave trace on the screen of a cathode-ray oscilloscope. A grid of 1 cm squares covers the screen. The time-base setting is $10\,\text{ms}\,\text{cm}^{-1}$.

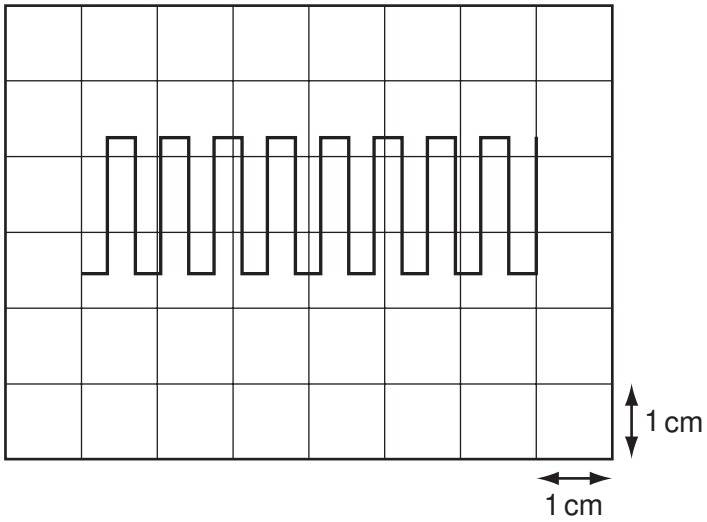

What is the approximate frequency of the square wave?

A 70 Hz **B** 140 Hz **C** 280 Hz **D** 1400 Hz

Space for working

WWW.XTREMEPAPERS.NET

6 A vector quantity V is resolved into two perpendicular components X and Y. The angle between V and component X is θ.

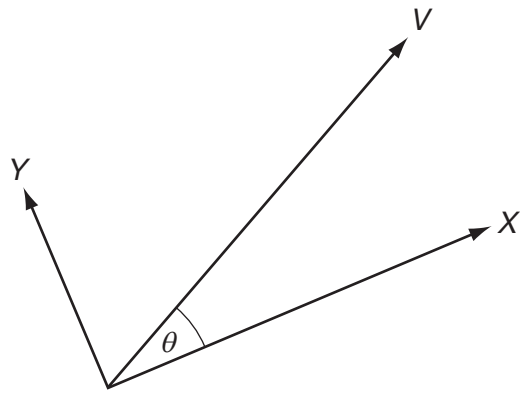

The angle between component X and the vector V is increased from 0° to 90°.

How do the magnitudes of X and Y change as the angle θ is increased in this way?

	X	Y
A	increase	increase
B	increase	decrease
C	decrease	increase
D	decrease	decrease

7 The product of pressure and volume has the same SI base units as

A energy.

B force.

C $\frac{\text{force}}{\text{area}}$.

D $\frac{\text{force}}{\text{length}}$.

Space for working

WWW.XTREMEPAPERS.NET

8 A small steel ball falls freely under gravity after being released from rest.

Which graph best represents the variation of the height *h* of the ball with time *t*?

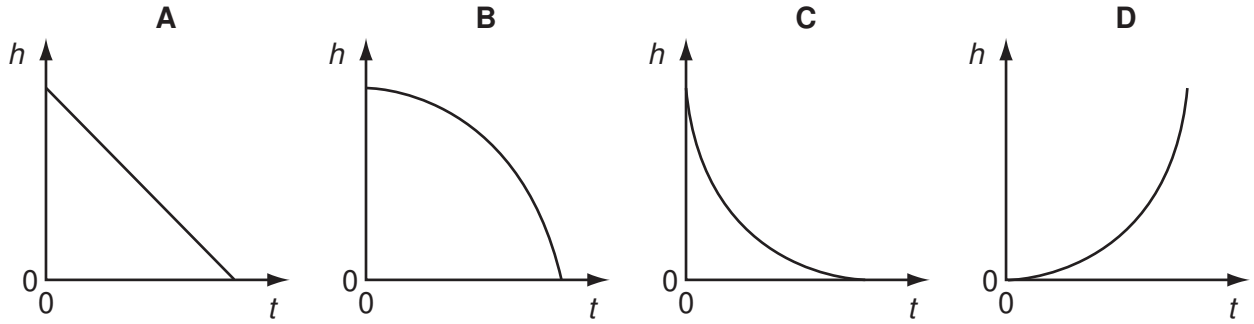

9 The diagram shows a velocity-time graph for a vehicle.

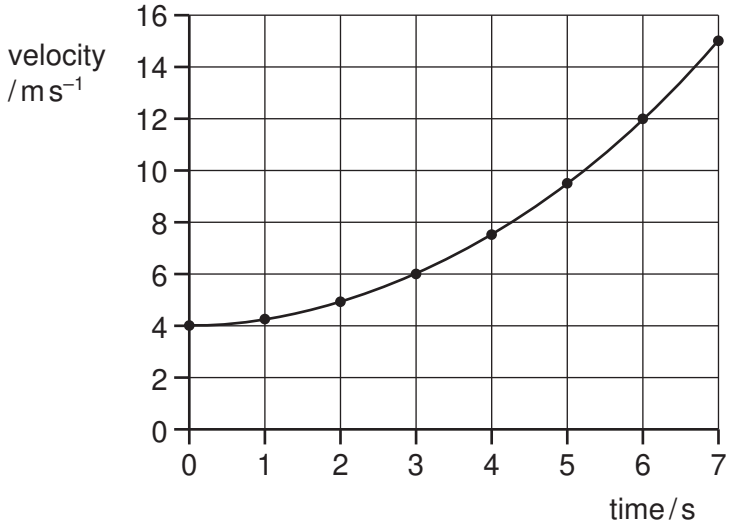

The vehicle, moving at $4.0\,m\,s^{-1}$, begins to accelerate at time = 0.

What is the vehicle's acceleration at time = 3.0 s?

A $0.67\,m\,s^{-2}$ **B** $1.0\,m\,s^{-2}$ **C** $1.3\,m\,s^{-2}$ **D** $2.0\,m\,s^{-2}$

Space for working

WWW.XTREMEPAPERS.NET

10 The diagram shows two identical spheres X and Y.

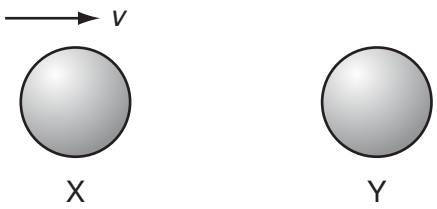

Initially, X moves with speed v directly towards Y. Y is stationary. The spheres collide elastically.

What happens?

	X	Y
A	moves with speed $\frac{1}{2}v$ to the right	moves with speed $\frac{1}{2}v$ to the right
B	moves with speed v to the left	remains stationary
C	moves with speed $\frac{1}{2}v$ to the left	moves with speed $\frac{1}{2}v$ to the right
D	stops	moves with speed v to the right

11 Two equal masses travel towards each other on a frictionless air track at speeds of $60\,\text{cm}\,\text{s}^{-1}$ and $40\,\text{cm}\,\text{s}^{-1}$. They stick together on impact.

What is the speed of the masses after impact?

A $10\,\text{cm}\,\text{s}^{-1}$ **B** $20\,\text{cm}\,\text{s}^{-1}$ **C** $40\,\text{cm}\,\text{s}^{-1}$ **D** $50\,\text{cm}\,\text{s}^{-1}$

Space for working

WWW.XTREMEPAPERS.NET

12 Forces of 3 N, 4 N and 5 N act at one point on an object. The angles at which the forces act can vary.

What is the value of the **minimum** resultant force of these forces?

A 0

B between 0 and 2 N

C 2 N

D between 2 N and 4 N

13 An object, immersed in a liquid in a tank, experiences an upthrust.

What is the physical reason for this upthrust?

A The density of the body differs from that of the liquid.

B The density of the liquid increases with depth.

C The pressure in the liquid increases with depth.

D The value of *g* in the liquid increases with depth.

Space for working

WWW.XTREMEPAPERS.NET

14 A brick weighing 20 N rests on an inclined plane. The weight of the brick has a component of 10 N parallel with the plane. The brick also experiences a frictional force of 4 N.

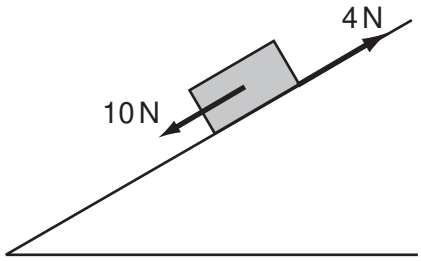

What is the acceleration of the brick down the plane? Assume that the acceleration of free fall g is equal to $10\,\mathrm{m\,s^{-2}}$.

A $0.3\,\mathrm{m\,s^{-2}}$ **B** $0.8\,\mathrm{m\,s^{-2}}$ **C** $3.0\,\mathrm{m\,s^{-2}}$ **D** $8.0\,\mathrm{m\,s^{-2}}$

15 A constant force F, acting on a car of mass m, moves the car up the slope through a distance s at constant velocity v. The angle of the slope to the horizontal is α.

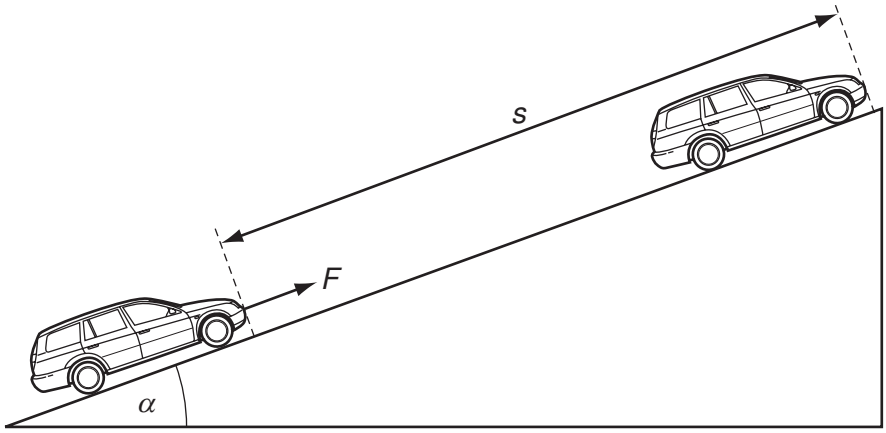

Which expression gives the efficiency of the process?

A $\dfrac{mgs\sin\alpha}{Fv}$ **B** $\dfrac{mv}{Fs}$ **C** $\dfrac{mv^2}{2Fs}$ **D** $\dfrac{mg\sin\alpha}{F}$

Space for working

WWW.XTREMEPAPERS.NET

16 A force of 1000 N is needed to lift the hook of a crane at a steady velocity. The crane is then used to lift a load of mass 1000 kg at a velocity of $0.50\,m\,s^{-1}$.

How much of the power developed by the motor of the crane is used in lifting the hook and the load? Assume that the acceleration of free fall *g* is equal to $10\,m\,s^{-2}$.

A 5.0 kW **B** 5.5 kW **C** 20 kW **D** 22 kW

17 When ice melts, it contracts.

Which row is correct for ice turning into water?

	distance between atoms	density
A	decreases	decreases
B	decreases	increases
C	increases	decreases
D	increases	increases

Space for working

WWW.XTREMEPAPERS.NET

18 Atmospheric pressure at sea level has a value of 100 kPa.
The density of sea water is 1020 kg m^{-3}.

At what depth in the sea would the total pressure be 110 kPa?

A 1.0 m **B** 9.8 m **C** 10 m **D** 11 m

19 A spring is compressed by a force. The graph shows the compressing force *F* plotted against the length *L* of the spring.

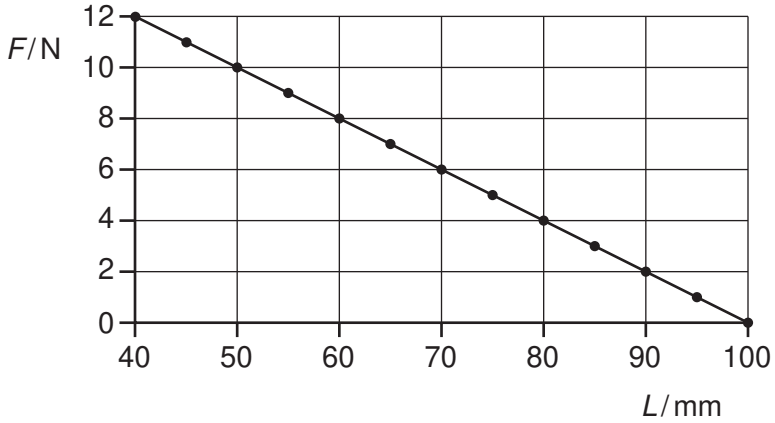

What is the spring constant of this spring?

A 0.2 N m^{-1} **B** 5 N m^{-1} **C** 100 N m^{-1} **D** 200 N m^{-1}

Space for working

WWW.XTREMEPAPERS.NET

20 Which graph represents the force-extension relationship of a rubber band that is stretched almost to its breaking point?

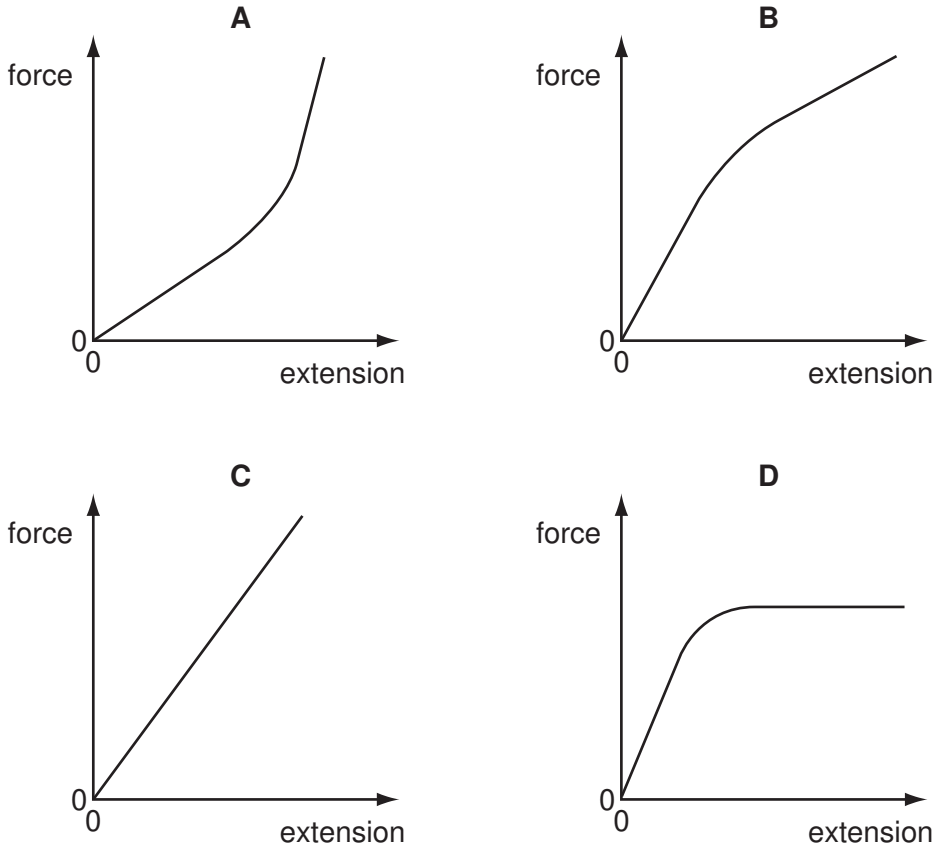

Space for working

WWW.XTREMEPAPERS.NET

21 In stress-strain experiments on metal wires, the stress axis is often marked in units of 10^8 Pa and the strain axis is marked as a percentage. This is shown for a particular wire in the diagram.

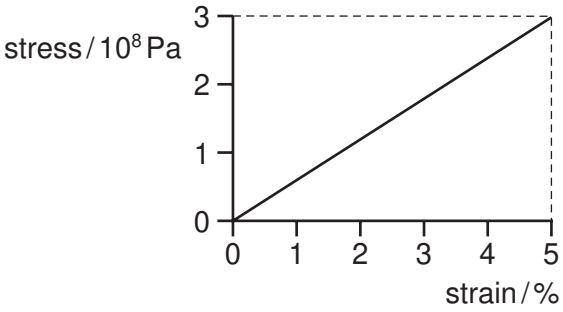

What is the value of the Young modulus for the material of the wire?

A 6.0×10^7 Pa **B** 7.5×10^8 Pa **C** 1.5×10^9 Pa **D** 6.0×10^9 Pa

22 The diagram shows a steel wire clamped at one end and tensioned at the other by a weight hung over a pulley.

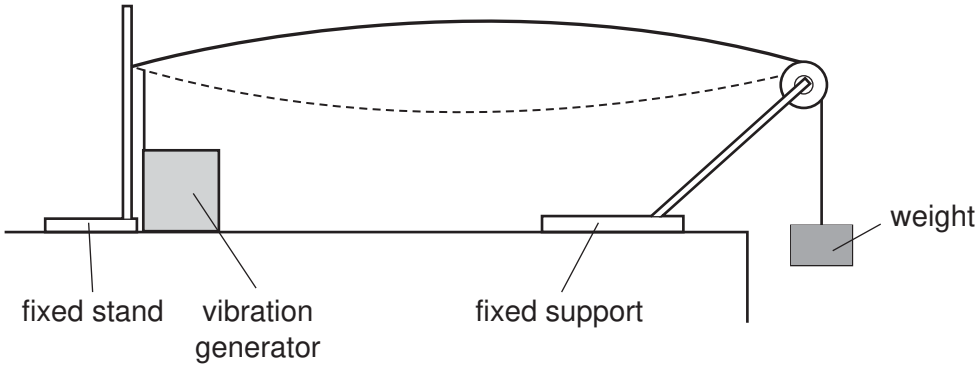

A vibration generator is attached to the wire near the clamped end. A stationary wave with one loop is produced. The frequency of the vibration generator is *f*.

Which frequency should be used to produce a stationary wave with two loops?

A $\frac{f}{4}$ **B** $\frac{f}{2}$ **C** $2f$ **D** $4f$

Space for working

WWW.XTREMEPAPERS.NET

23 Diagram 1 shows a ripple tank experiment in which plane waves are diffracted through a narrow slit in a metal sheet.

Diagram 2 shows the same tank with a slit of greater width.

In each case, the pattern of the waves incident on the slit and the emergent pattern are shown.

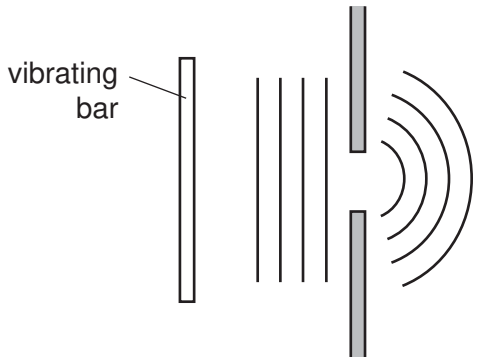

diagram 1

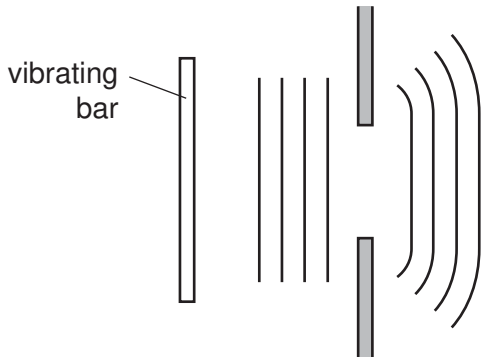

diagram 2

Which action would cause the waves in diagram 1 to be diffracted less and so produce an emergent pattern closer to that shown in diagram 2?

A increasing the frequency of vibration of the bar

B increasing the speed of the waves by making the water in the tank deeper

C reducing the amplitude of vibration of the bar

D reducing the length of the vibrating bar

24 Electromagnetic waves from an unknown source in space were found to be significantly diffracted when passing through gaps of the order of 10^{-5} m.

Which type of wave are they most likely to be?

A radio waves

B microwaves

C infra-red waves

D ultraviolet waves

Space for working

WWW.XTREMEPAPERS.NET

25 Using monochromatic light, interference fringes are produced on a screen placed a distance D from a pair of slits of separation a. The separation of the fringes is x.

Both a and D are now doubled.

What is the new fringe separation?

A $\frac{x}{2}$ **B** x **C** $2x$ **D** $4x$

26 Two oppositely-charged parallel plates are arranged as shown.

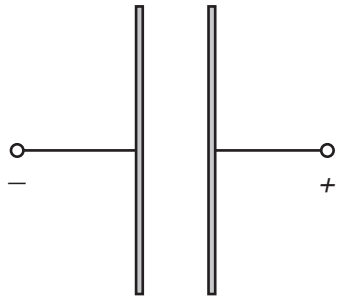

An electron is released from rest from the surface of the negatively-charged plate.

The electron travels from the negatively-charged plate towards the positively-charged plate.

Which graph shows how the force F on the electron varies with its distance x from the negative plate?

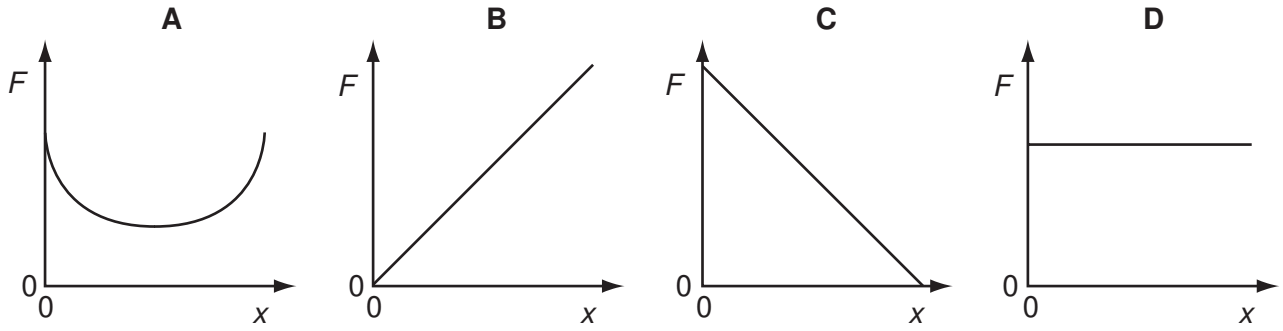

Space for working

WWW.XTREMEPAPERS.NET

27 In the diagram, the shaded area represents a uniform electric field directed away from the observer (at right-angles into the plane of the paper).

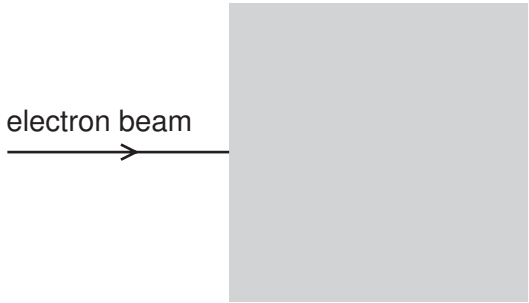

A horizontal beam of electrons enters the field, travelling from left to right.

In which direction is this beam deflected by the field?

A upwards (in the plane of the paper)

B downwards (in the plane of the paper)

C away from the observer

D towards the observer

Space for working

WWW.XTREMEPAPERS.NET

28 The diagram shows two points P and Q which lie, 90° apart, on a circle of radius *r*.

A positive point charge at the centre of the circle creates an electric field of magnitude *E* at both P and Q.

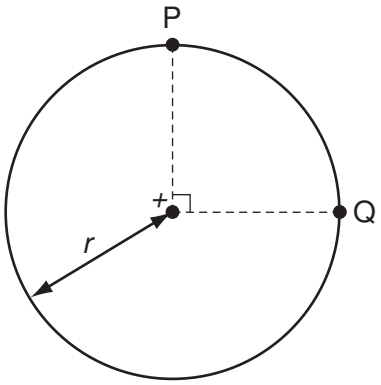

Which expression gives the work done in moving a unit positive charge from P to Q?

A 0 **B** $E \times r$ **C** $E \times \left(\frac{\pi r}{2}\right)$ **D** $E \times (\pi r)$

Space for working

WWW.XTREMEPAPERS.NET

29 Which row describes the circumstances under which forces act on a charged particle in a uniform electric field?

	charged particle	direction of force
A	moving charges only	parallel to the field
B	stationary charges only	perpendicular to the field
C	stationary and moving charges	parallel to the field
D	stationary and moving charges	perpendicular to the field

30 The resistance of a thermistor depends on its temperature, and the resistance of a light-dependent resistor (LDR) depends on the illumination.

Under which conditions will the resistance of both a thermistor and an LDR be highest?

	thermistor	LDR
A	highest temperature	highest illumination
B	highest temperature	lowest illumination
C	lowest temperature	highest illumination
D	lowest temperature	lowest illumination

31 In terms of energy transfer W and charge q, what are the definitions of potential difference (p.d.) and electromotive force (e.m.f.)?

	p.d.	e.m.f.
A	$\frac{W}{q}$	$\frac{W}{q}$
B	$\frac{W}{q}$	Wq
C	Wq	$\frac{W}{q}$
D	Wq	Wq

Space for working

WWW.XTREMEPAPERS.NET

32 In each arrangement of resistors, the ammeter has a resistance of 2 Ω.

Which arrangement gives the largest reading on the ammeter when the same potential difference is applied between points P and Q?

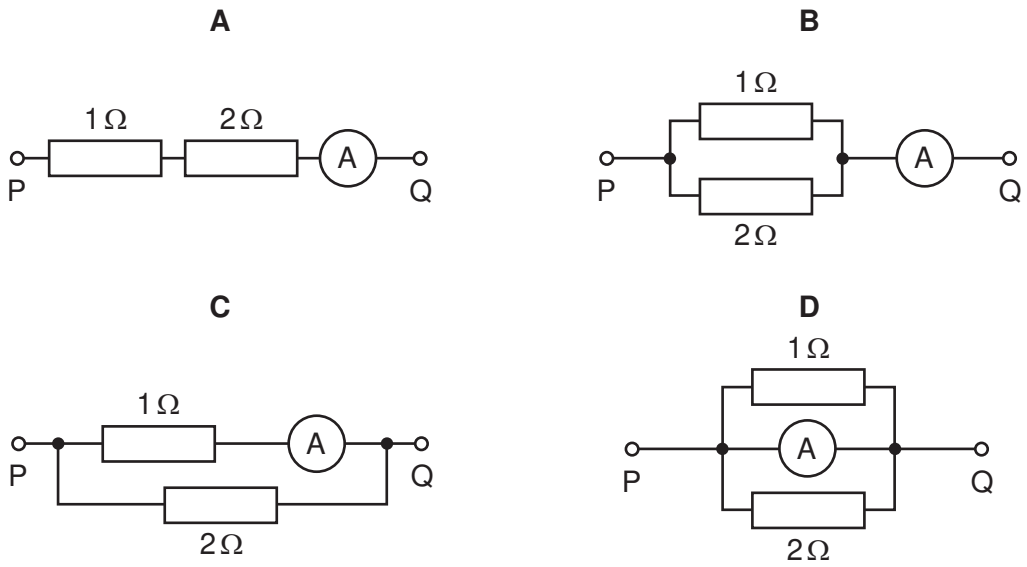

33 A source of e.m.f. of 9.0 mV has an internal resistance of 6.0 Ω.

It is connected across a galvanometer of resistance 30 Ω.

What will be the current in the galvanometer?

A 250 μA **B** 300 μA **C** 1.5 mA **D** 2.5 mA

Space for working

WWW.XTREMEPAPERS.NET

34 The resistors P, Q and R in the circuit have equal resistance.

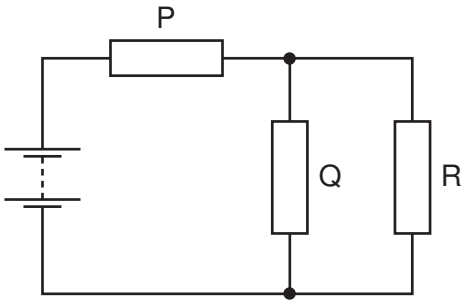

The battery, of negligible internal resistance, supplies a total power of 12 W.

What is the power dissipated by heating in resistor R?

A 2 W **B** 3 W **C** 4 W **D** 6 W

35 In deriving a formula for the combined resistance of three different resistors in series, Kirchhoff's laws are used.

Which physics principle is involved in this derivation?

A the conservation of charge

B the direction of the flow of charge is from negative to positive

C the potential difference across each resistor is the same

D the current varies in each resistor, in proportion to the resistor value

Space for working

WWW.XTREMEPAPERS.NET

36 What is the unit of resistivity?

A $\Omega\,m^{-2}$ **B** $\Omega\,m^{-1}$ **C** Ω **D** $\Omega\,m$

37 The grid shows a number of nuclides arranged according to the number of protons and the number of neutrons in each.

A nucleus of the nuclide $^{8}_{3}Li$ decays by emitting a β-particle.

What is the resulting nuclide?

number of protons							
4					**A**	**B**	
3				$^{6}_{3}Li$	$^{7}_{3}Li$	$^{8}_{3}Li$	
2		$^{3}_{2}He$	$^{4}_{2}He$			**C**	**D**
1	$^{1}_{1}H$	$^{2}_{1}H$					
	0	1	2	3	4	5	6

number of neutrons

Space for working

WWW.XTREMEPAPERS.NET

38 The following represents a sequence of radioactive decays involving two α-particles and one β-particle.

$$^{217}_{85}\text{At} \xrightarrow{\alpha} \text{V} \xrightarrow{\alpha} \text{W} \xrightarrow{\beta} \text{X}$$

What is the nuclide X?

A $^{213}_{85}\text{At}$ **B** $^{215}_{77}\text{Ir}$ **C** $^{209}_{82}\text{Pb}$ **D** $^{217}_{81}\text{Tl}$

39 What are the correct descriptions of a γ-ray and a β-particle?

	γ-ray	β-particle
A	high-speed electron	electromagnetic radiation
B	electromagnetic radiation	helium-4 nucleus
C	electromagnetic radiation	high-speed electron
D	high-speed electron	helium-4 nucleus

40 What is **not** conserved in nuclear processes?

A charge

B momentum

C the total number of neutrons

D the total number of nucleons

Space for working

Permission to reproduce items where third-party owned material protected by copyright is included has been sought and cleared where possible. Every reasonable effort has been made by the publisher (UCLES) to trace copyright holders, but if any items requiring clearance have unwittingly been included, the publisher will be pleased to make amends at the earliest possible opportunity.

University of Cambridge International Examinations is part of the Cambridge Assessment Group. Cambridge Assessment is the brand name of University of Cambridge Local Examinations Syndicate (UCLES), which is itself a department of the University of Cambridge.

© UCLES 2010

WWW.XTREMEPAPERS.NET